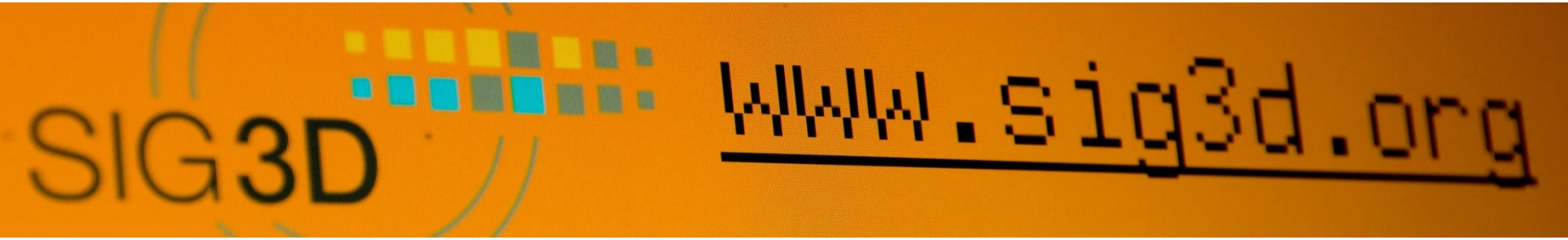

SIG3D Proposal for an enhanced CityGML LOD Concept

Joachim Benner, KIT

© SIG3D 2013

Agenda

Introduction

CityGML 2.0 LOD concept

- Short description
- Deficits of the concept

SIG3D proposal for a new LOD concept

- General ideas
- LOD concept for Building Module

Summary and conclusion

© SIG3D 2013

CityGML 2.0 LOD concept- Specification

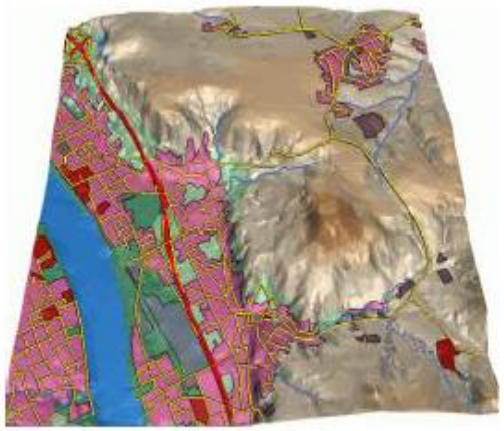

LOD0

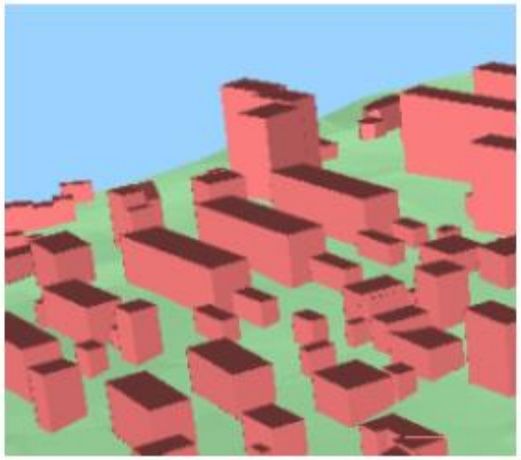

LOD1

LOD2

LOD3

LOD4

© SIG3D 2013

Introduction

- The Level Of Detail (LOD) concept apparently is the most successful (i.e. most cited) part of CityGML
- This is mainly due to the fact that the CityGML LOD is more a marketing label than an attribute with specific technical meaning.
- The LOD concept and its implementation in CityGML have deficits, motivating the Modeling Group of SIG3D since one year to develop an enhanced concept.
- This discussion is not yet finished, the actual status supported by most members of the Modeling Group, will be presented here.

© SIG3D 2013

Potential functions of "Levels of Detail"

- Many 3D city data models incorporate a concept for different LODs.
- The main goal for defining LODs is to partition a complex model into alternative models of different complexity.
- Information content, complexity and quality of each alternative model are characterized by suited metadata.
- In this context, the actual CityGML LOD concept has severe deficits.

© SIG3D 2013

Deficits of the actual LOD concept – 1

- The LOD definitions are informal and vague, allowing a lot of ambiguity in the actual usage.
- The statement "*a CityGML Building is modeled in LODx*" in fact only determines a type of geometric representation and some degree of geometric correspondence between model and real object.
- For x ≥ 2, it implies nothing about the actual semantic content of a *Building* or *BuildingPart* object.

© SIG3D 2013

LOD 2 – 6 different legal variants

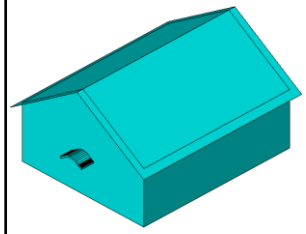	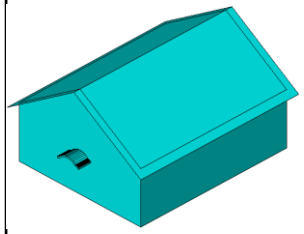	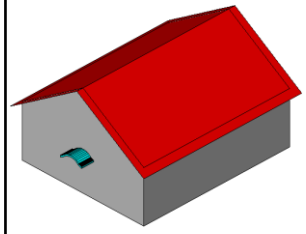	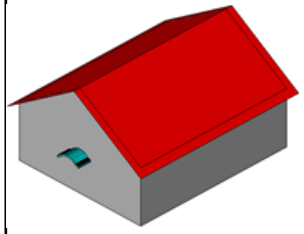	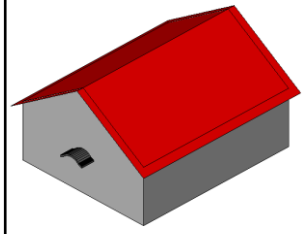	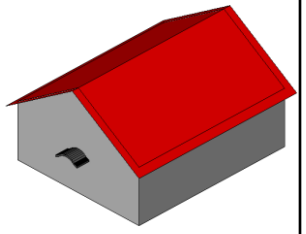
Building MultiSurface	Building Solid + MultiSurface	Building Multisurface WallSurface RoofSurface GroundSurface	Building Solid + MultiSurface WallSurface RoofSurface GroundSurface	Building No geometry WallSurface RoofSurface GroundSurface BuildingInstallation MultiSurface	Building Solid WallSurface RoofSurface GroundSurface BuildingInstallation MultiSurface

Source: Karlsruhe Institute of Technology

© SIG3D 2013

Deficits of the actual LOD concept – 2

- Features corresponding to the building‘s exterior shell have different geometrical properties for LOD 3 and LOD4, though there is no difference in modeling → unnecessary increase of model complexity
- Modeling of interior structures of the building with different geometrical accuracy is not possible.
- The modeling of interior structures is only possible when simultaneously the exterior shell is represented with highest geometrical accuracy.
- Almost total lack of metadata addressing geometric accuracy and structural complexity, semantic meaning and structural complexity, …
- Usage of the same LOD concept in (almost) all thematic modules

© SIG3D 2013

LOD concept for thematic areas other than *Building*

- The CityGML LOD concept was developed and defined for the *Building* module.
- The transfer of the concept to other thematic modules is incomplete and in some cases is problematic.
  - Most thematic modules have no LOD0 properties;
  - Four alternative geometrical properties (lod1… - lod4…) for feature class *LandUse* with undefined meaning;
  - LOD4 (interior) representation for real objects with no relevant interior structure (*SolitaryVegetationObject*, *PlantCover*, *WaterBody*, all classes of *Transportation* module, …)

© SIG3D 2013

Development of an enhanced CityGML LOD concept - General approach

- Development of a modular LOD concept for the CityGML *Building* module, which later on can be transferred and adapted to other thematic areas.
- Representation of the actual LOD of a *Building* by suited metadata, which must be complemented by additional, LOD-independent metadata.
- Definition of a mapping between old and new LOD concept (as far as possible).

© SIG3D 2013

General idea

- The LOD of a *Building* object is described by separately specifying
  - a geometric LOD for the building's exterior shell (LOD**G**- E)
  - a semantic LOD for the building's exterior shell (LOD**S**-E)
  - a geometric LOD for the building's interior (LOD**G**-I)
  - a semantic LOD for the buildings interior (LOD**S**-I)
- All features related with the exterior shell (*Building*, *BuildingPart*, *BuildingInstallation*, *WallSurface*, *RoofSurface*, *Door*, …) are represented with the same LOD**G**-E.
- All features related with the interior building structure (*Room*, *IntBuildingInstallation*, *BuildingFurniture*, *InteriorWallSurface*, *CeilingSurface*, *Door*, …) are represented with the same LOD**G**-I, which may differ from the LOD**G**-E in use.
- Specific rules for the allowed combinations of interior and exterior LODs may be specified (open issue).

© SIG3D 2013

Exterior shell – Proposal for LOD definitions

LOD**G**-E0: Representation as 2D or 2.5D geometry (open question)

LOD**G**-E1: Representation as vertical extrusion (*Solid*)

LOD**G**-E2: Geometrically generalized representation as *Solid* and/or *MultiSurface*

LOD**G**-E3: Geometrically exact representation as *Solid* and/or *MultiSurface*

LOD**S**-E0: No semantic structure of *Building*/*BuildingPart*

LOD**S**-E1: Structuring by *BoundarySurfaces*

LOD**S**-E2: Structuring by *BoundarySurfaces* and *BuildingInstallations*

LOD**S**-E3: Structuring by *BoundarySurfaces*, *BuildingInstallations*, *Doors* and *Windows*

© SIG3D 2013

Interior building structure– Proposal for LOD definitions

LODG-I0: Representation as 2D or 2.5 geometry

LODG-I1: Representation as vertical extrusion (*Solid*)

LODG-I2: Geometrically generalized representation as *Solid* and/or *MultiSurface*

LODG-I3: Geometrically exact representation as *Solid* and/or *MultiSurface*

LODS-I0: No semantic structure of *Room*

LODS-I1: Structuring by *BoundarySurfaces*

LODS-I2: Structuring by *BoundarySurfaces*, *IntBuildingInstallations* and *BuildingFurniture*

LODS-I3: Structuring by *BoundarySurfaces*, *IntBuildingInstallations*, *BuildingFurniture*, *Doors* and *Windows*

© SIG3D 2013

Exterior shell – combination of geometric and semantic LOD

	LOD**S**-E0	LOD**S**-E1	LOD**S**-E2	LOD**S**-E3
LOD**G**-E0				
LOD**G**-E1				
LOD**G**-E2				
LOD**G**-E3				

LOD0	Prohibited
LOD1	Not supported formerly
LOD2	
LOD3	
LOD4	

© SIG3D 2013

Semantic LOD: LOD**S**-E0

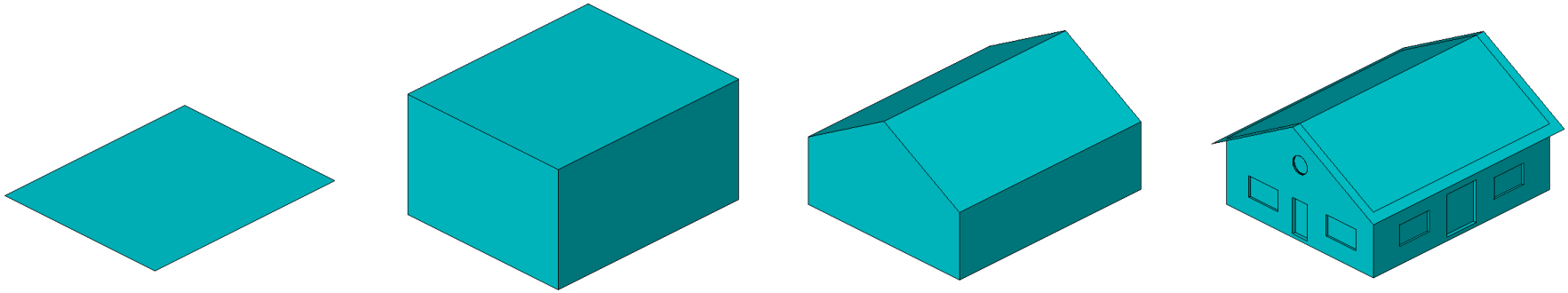

LOD**G**-E0 LOD**G**-E1 LOD**G**-E2 LOD**G**-E3

Source: Karlsruhe Institute of Technology

	LOD**S**-E0	LOD**S**-E1	LOD**S**-E2	LOD**S**-E3
LOD**G**-E0	■			
LOD**G**-E1	■			
LOD**G**-E2	■			
LOD**G**-E3	■			

© SIG3D 2013

Geometric LOD: LOD**G**-E3

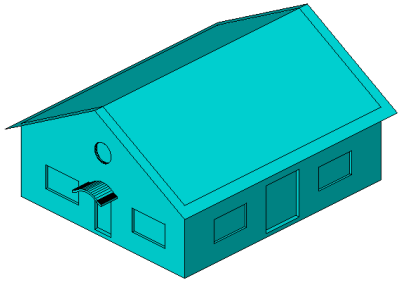

LOD**S**-E0

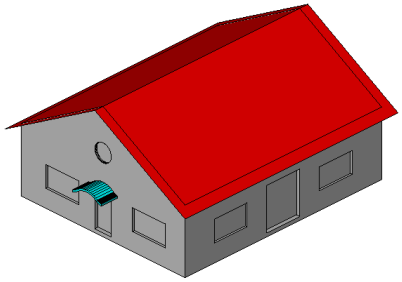

LOD**S**-E1

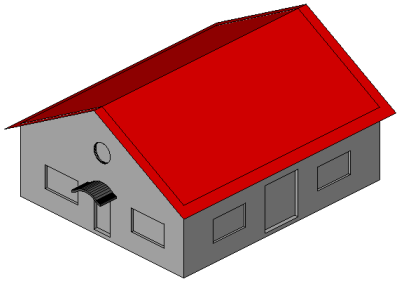

LOD**S**-E2

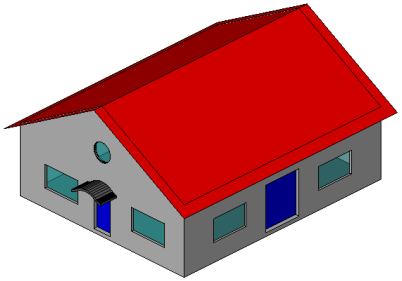

LOD**S**-E3

Source: Karlsruhe Institute of Technology

	LOD**S**-E0	LOD**S**-E1	LOD**S**-E2	LOD**S**-E3
LOD**G**-E0				
LOD**G**-E1				
LOD**G**-E2				
LOD**G**-E3	■	■	■	■

© SIG3D 2013

Interior structure – combination of geometric and semantic LOD

	LOD**S**-I0	LOD**S**-I1	LOD**S**-I2	LOD**S**-I3
LOD**G**-I0				
LOD**G**-I1				
LOD**G**-I2				
LOD**G**-I3				

Interior structure

LOD0	Prohibited
LOD1	Not supported formerly
LOD2	
LOD3	
LOD4	

© SIG3D 2013

Semantic LOD: LOD**S**-I0

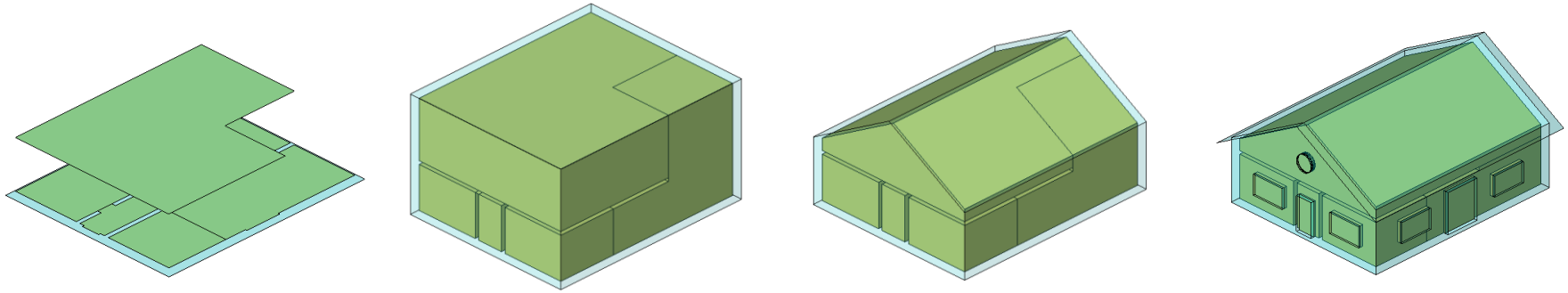

LOD**G**-I0 LOD**G**-I1 LOD**G**-I2 LOD**G**-I3

Source: Karlsruhe Institute of Technology

	LOD**S**-I0	LOD**S**-I1	LOD**S**-I2	LOD**S**-I3
LOD**G**-I0	■			
LOD**G**-I1	■			
LOD**G**-I2	■			
LOD**G**-I3	■			

© SIG3D 2013

Combination of exterior and interior models

		Exterior shell										
		Not modeled	LOD**G**-E0 / LOD**S**-E0	LOD**G**-E1 / LOD**S**-E0	LOD**G**-E2 / LOD**S**-E0	LOD**G**-E2 / LOD**S**-E1	LOD**G**-E2 / LOD**S**-E2	LOD**G**-E2 / LOD**S**-E3	LOD**G**-E3 / LOD**S**-E0	LOD**G**-E3 / LOD**S**-E1	LOD**G**-E3 / LOD**S**-E2	LOD**G**-E3 / LOD**S**-E3
	Not modeled											
Interior components	LOD**G**-I0 / LOD**S** I0											
	LOD**G**-I1 / LOD**S**-I0											
	LOD**G**-I2 / LOD**S**-I0											
	LOD**G**-I2 / LOD**S**-I1											
	LOD**G**-I2 / LOD**S**-I2											
	LOD**G**-I2 / LOD**S**-I3											
	LOD**G**-I3 / LOD**S**-I0											
	LOD**G**-I3 / LOD**S**-I1											
	LOD**G**-I3 / LOD**S**-I2											
	LOD**G**-I3 / LOD**S**-I3											

LOD0
LOD1
LOD2
LOD3
LOD4

Prohibited
Not supported formerly

© SIG3D 2013

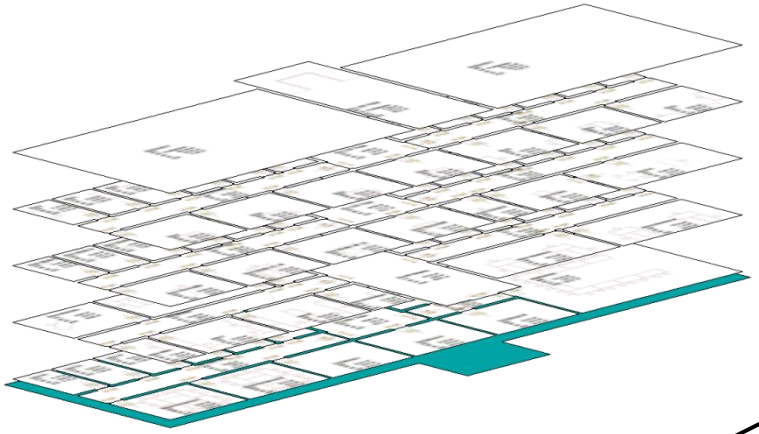

LOD**G**-E0 / LOD**S**-E0

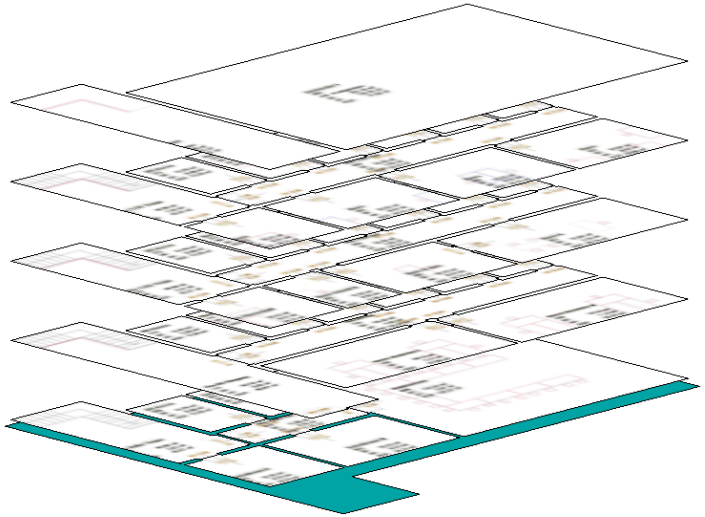

LOD**G**-I0 / LOD**S**-I0

Source: Karlsruhe Institute of Technology

		Außenhülle											
		Nicht modelliert	LODG-E0 / LODS-E0	LODG-E1 / LODS-E0	LODG-E2 / LODS-E0	LODG-E2 / LODS-E1	LODG-E2 / LODS-E2	LODG-E2 / LODS-E3	LODG-E3 / LODS-E0	LODG-E3 / LODS-E1	LODG-E3 / LODS-E2	LODG-E3 / LODS-E3
	Nicht modelliert											
Gebäudeinneres	LODG-I0 / LODS-I0											
	LODG-I1 / LODS-I0											
	LODG-I2 / LODS-I0											
	LODG-I2 / LODS-I1											
	LODG-I2 / LODS-I2											
	LODG-I2 / LODS-I3											
	LODG-I3 / LODS-I0											
	LODG-I3 / LODS-I1											
	LODG-I3 / LODS-I2											
	LODG-I3 / LODS-I3											

© SIG3D 2013

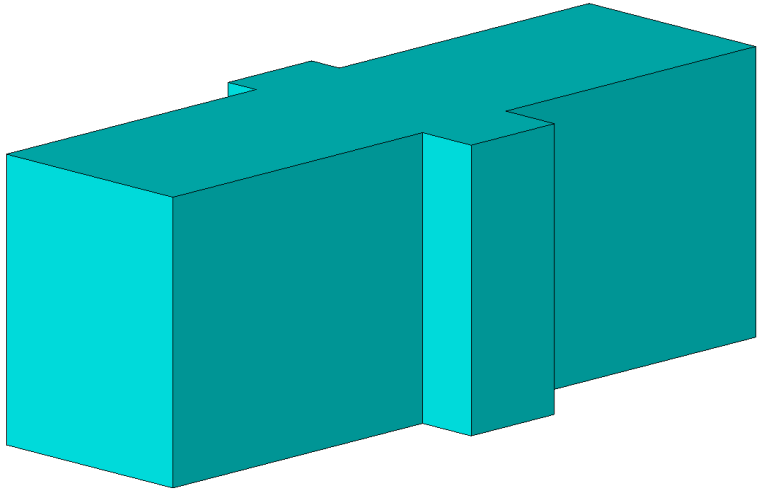

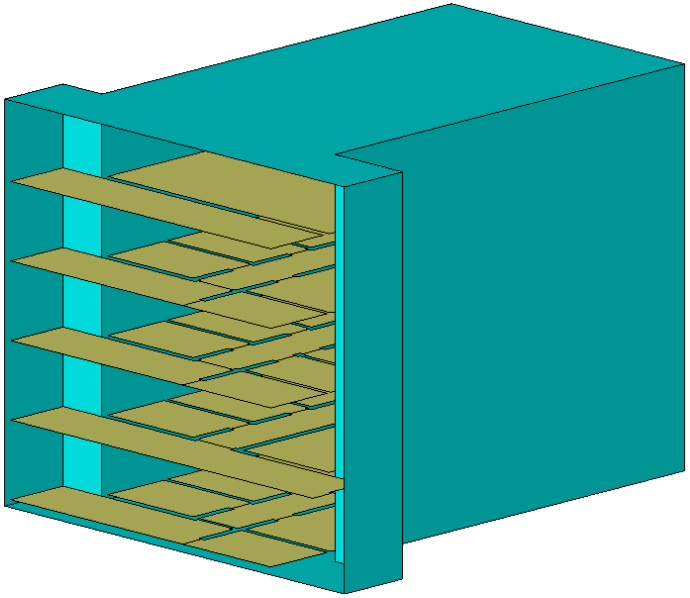

LOD**G**-E1 / LOD**S**-E0

LOD**G**-I0 / LOD**S**-I0

Source: Karlsruhe Institute of Technology

		Außenhülle											
		Nicht modelliert	LODG-E0 / LODS-E0	LODG-E1 / LODS-E0	LODG-E2 / LODS-E0	LODG-E2 / LODS-E1	LODG-E2 / LODS-E2	LODG-E2 / LODS-E3	LODG-E3 / LODS-E0	LODG-E3 / LODS-E1	LODG-E3 / LODS-E2	LODG-E3 / LODS-E3
	Nicht modelliert											
Gebäudeinneres	LODG-I0 / LODS-I0											
	LODG-I1 / LODS-I0											
	LODG-I2 / LODS-I0											
	LODG-I2 / LODS-I1											
	LODG-I2 / LODS-I2											
	LODG-I2 / LODS-I3											
	LODG-I3 / LODS-I0											
	LODG-I3 / LODS-I1											
	LODG-I3 / LODS-I2											
	LODG-I3 / LODS-I3											

© SIG3D 2013

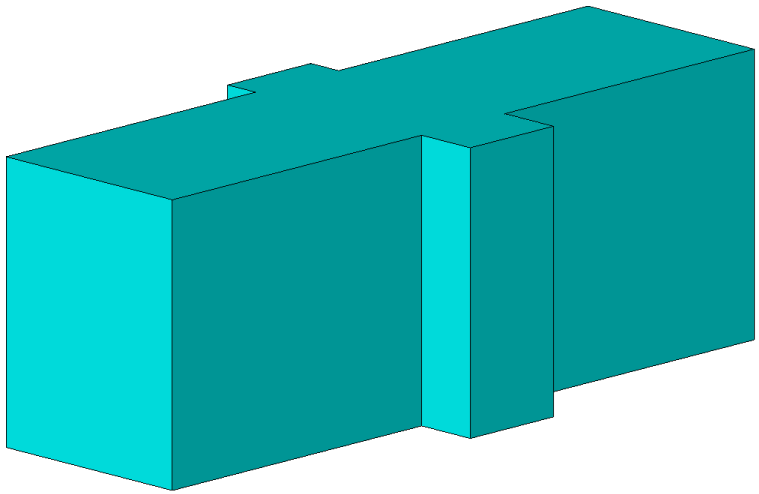

LOD**G**-E1 / LOD**S**-E0

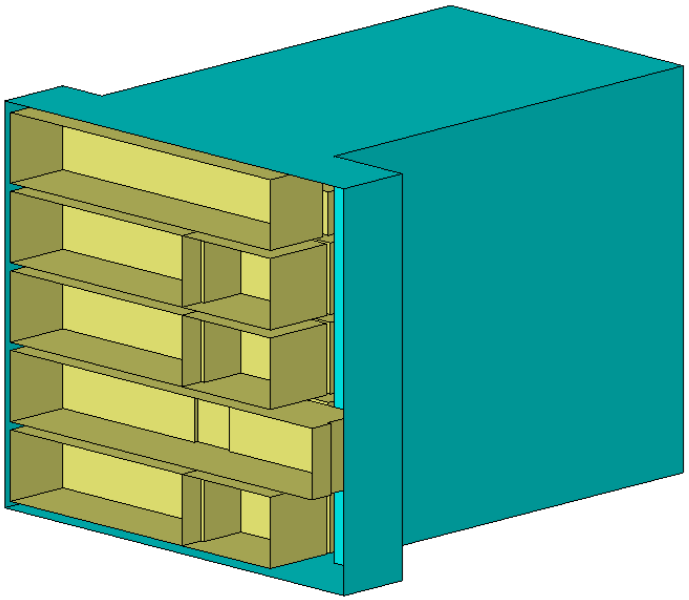

LOD**G**-I1 / LOD**S**-I0

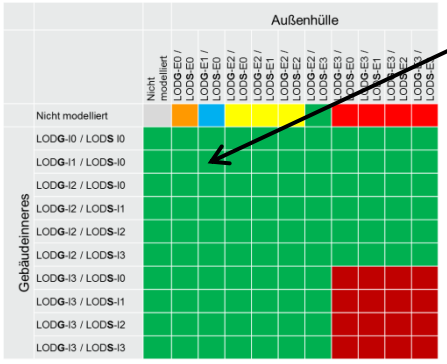

Source: Karlsruhe Institute of Technology

© SIG3D 2013

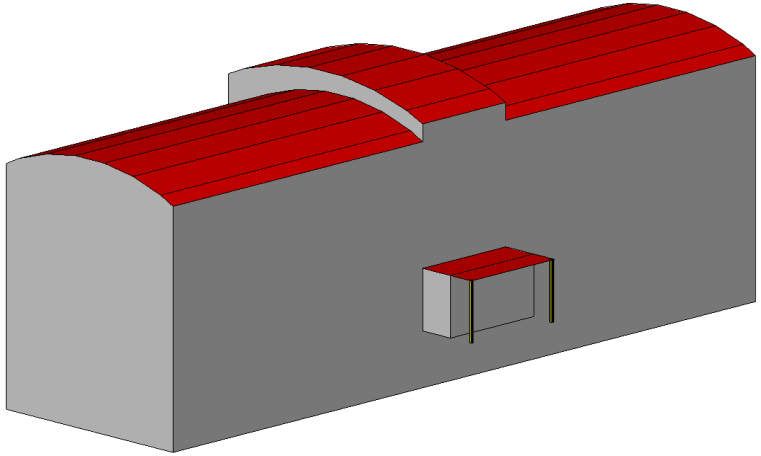

LOD**G**-E2 / LOD**S**-E2

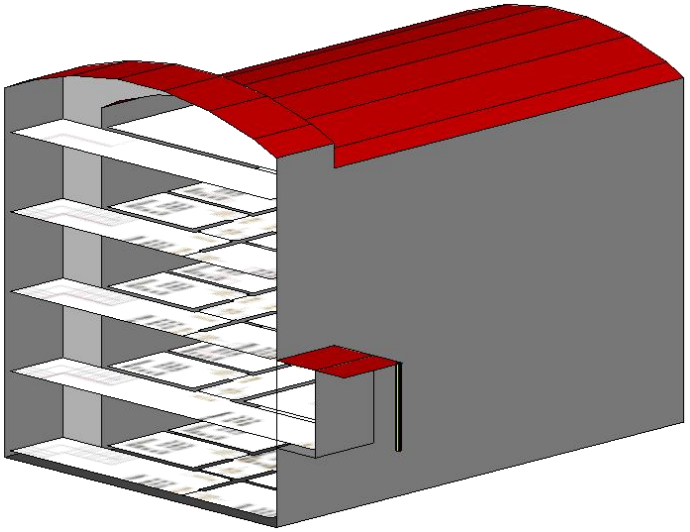

LOD**G**-I0 / LOD**S**-I0

Source: Karlsruhe Institute of Technology

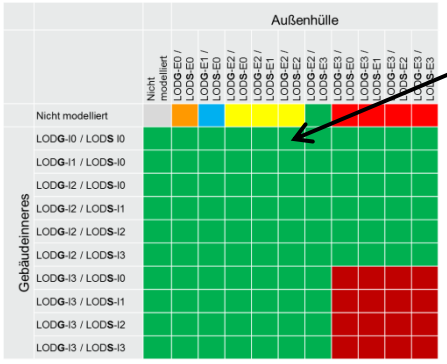

© SIG3D 2013

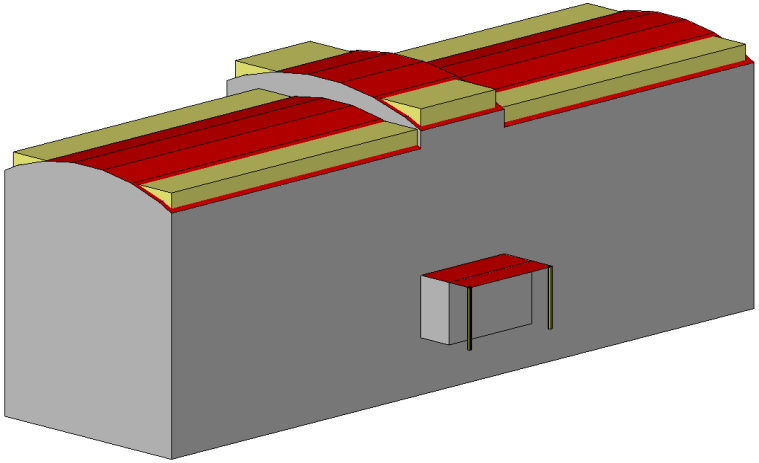

LOD**G**-E2 / LOD**S**-E2

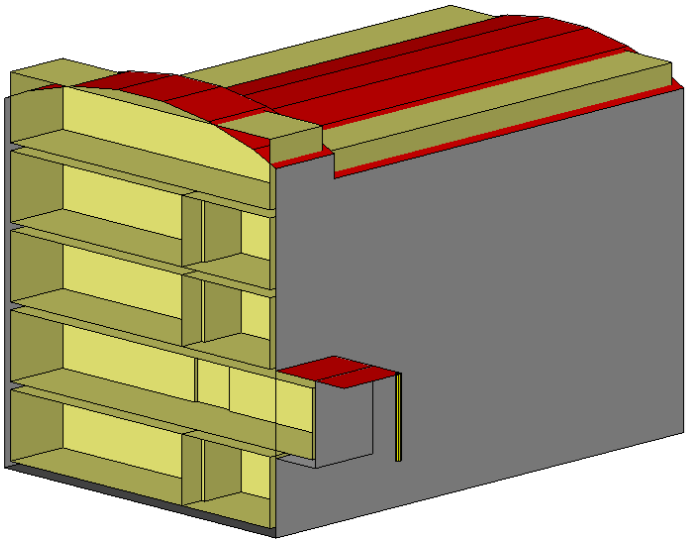

LOD**G**-I1 / LOD**S**-I0

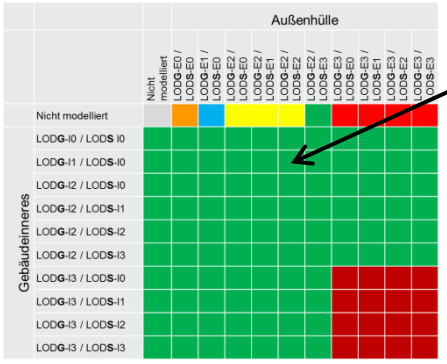

Source: Karlsruhe Institute of Technology

© SIG3D 2013

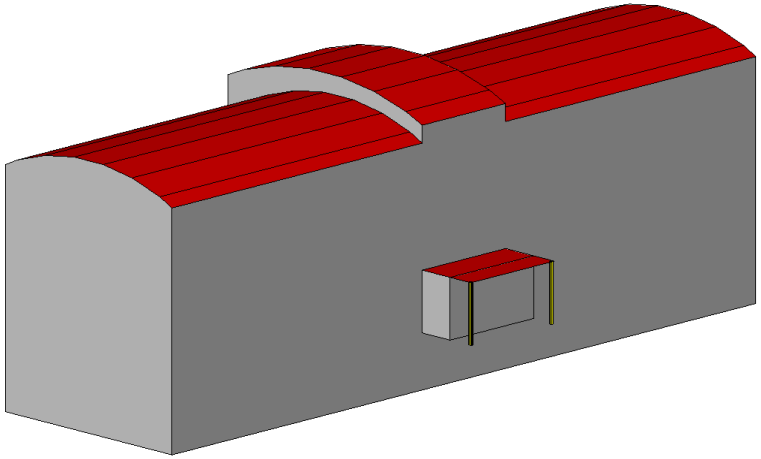

LOD**G**-E2 / LOD**S**-E2

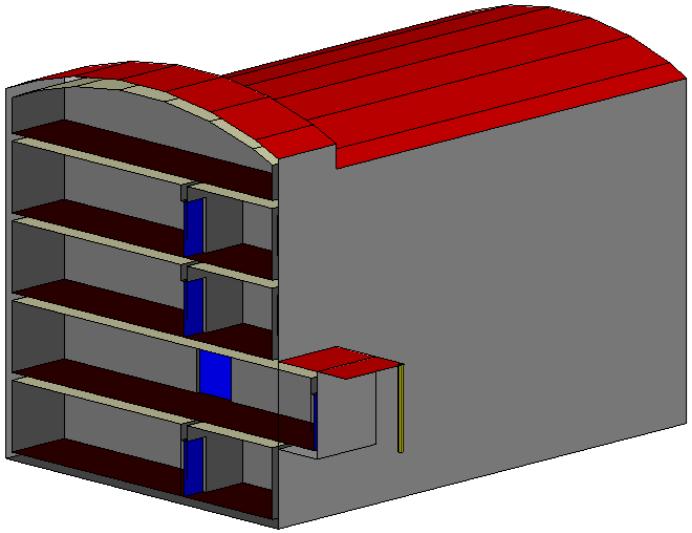

LOD**G**-I3 / LOD**S**-I3

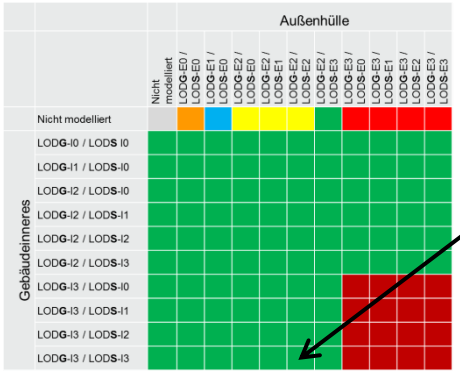

Source: Karlsruhe Institute of Technology

© SIG3D 2013

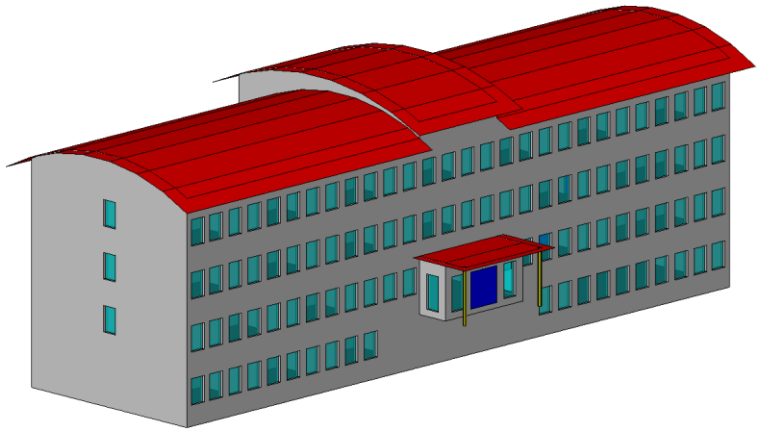

LOD**G**-E3 / LOD**S**-E3

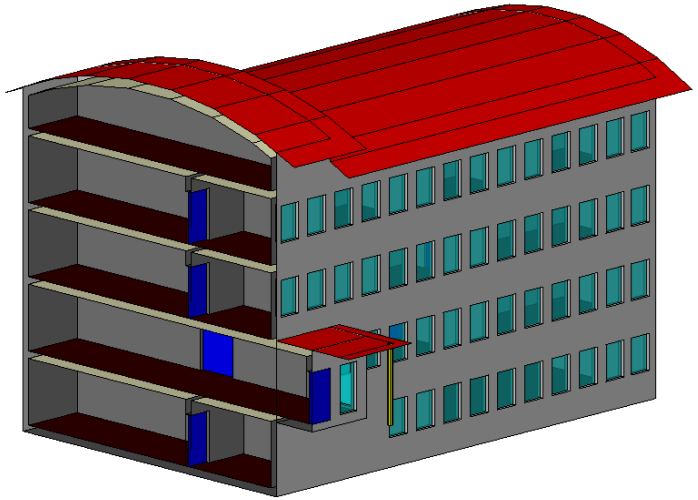

LOD**G**-I3 / LOD**S**-I3

Source: Karlsruhe Institute of Technology

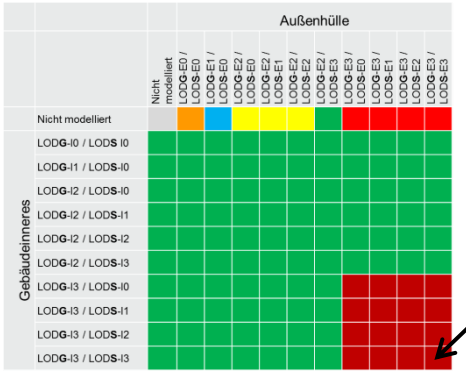

© SIG3D 2013

Building metadata

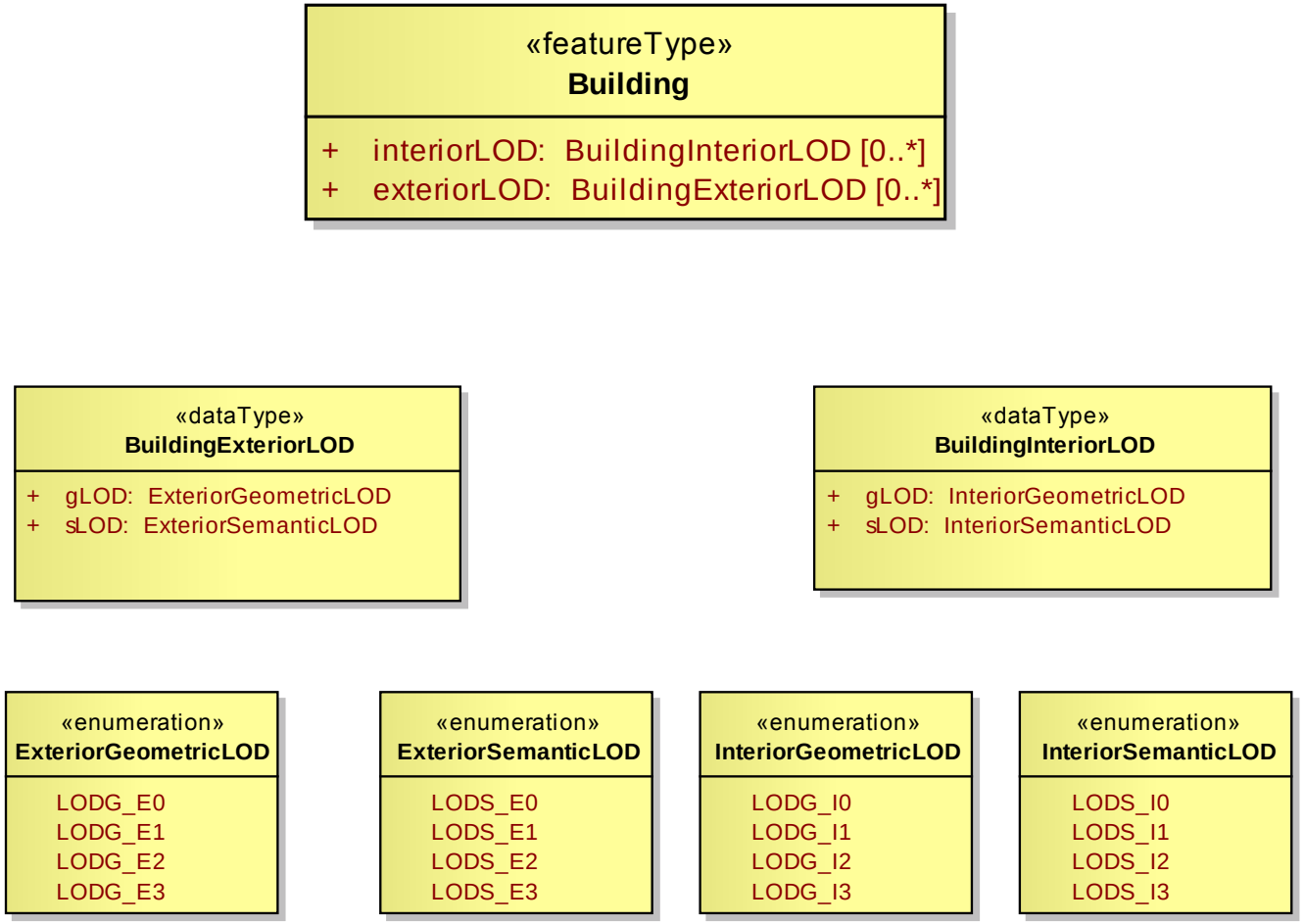

May be extended by additional metadata

© SIG3D 2013

Exterior features

AbstractSite
BuildingInfo

«featureType»
AbstractBuilding

+ class: BuildingClass [0..1]
+ function: BuildingFunction [0..*]
+ usage: BuildingUsage [0..*]
+ yearOfConstruction: Year [0..1]
+ yearOfDemolition: Year [0..1]
+ roofType: RoofType [0..1]
+ measuredHeight: HeightAboveGround [0..*]
+ storeysAboveGround: Integer [0..1]
+ storeysBelowGround: Integer [0..1]
+ storeyHeightsAboveGround: MeasureList [0..1]
+ storeyHeightsBelowGround: MeasureList [0..1]
+ glod0Geometry: BuildingGLOD0Representation [0..*]
+ glod1Geometry: BuildingGLOD1Representation [0..1]
+ glod2Geometry: BuildingGLOD2Representation [0..1]
+ glod3Geometry: BuildingGLOD3Representation [0..1]

AbstractCityObject

«featureType»
BuildingInstallation

+ class: BuildingInstallationClass [0..1]
+ function: BuildingInstallationFunction [0..*]
+ usage: BuildingInstallationUsage [0..*]
+ glod2Geometry: ExplicitOrImplicitGeometryRepresentation [0..1]
+ glod3Geometry: ExplicitOrImplicitGeometryRepresentation [0..1]

AbstractCityObject

«featureType»
AbstractBoundarySurface

+ glod2MultiSurface: GM_MultiSurface [0..1]
+ glod3MultiSurface: GM_MultiSurface [0..1]

AbstractCityObject

«featureType»
AbstractOpening

+ glod2Geometry: MultiSurfaceOrImplicitGeometryRepresentation [0..1]
+ glod3Geometry: MultiSurfaceOrImplicitGeometryRepresentation [0..1]

© SIG3D 2013

Interior features

AbstractCityObject

«featureType»
Room

+ class: RoomClass [0..1]
+ function: RoomFunction [0..*]
+ usage: RoomUsage [0..*]
+ glod0Geometry: RoomGLOD0Representation [0..1]
+ glod1Geometry: RoomGLOD1Representation [0..1]
+ glod2Geometry: RoomGLOD2Representation [0..1]
+ glod3Geometry: RoomGLOD3Representation [0..1]

AbstractCityObject

«featureType»
IntBuildingInstallation

+ class: IntBuildingInstallationClass [0..1]
+ function: IntBuildingInstallationFunction [0..*]
+ usage: IntBuildingInstallationUsage [0..*]
+ glod2Geometry: ExplicitOrImplicitGeometryRepresentation [0..1]
+ glod3Geometry: ExplicitOrImplicitGeometryRepresentation [0..1]

AbstractCityObject

«featureType»
BuildingFurniture

+ class: BuildingFurnitureClass [0..1]
+ function: BuildingFurnitureFunction [0..*]
+ usage: BuildingFurnitureUsage [0..*]
+ glod2Geometry: ExplicitOrImplicitGeometryRepresentation [0..1]
+ glod3Geometry: ExplicitOrImplicitGeometryRepresentation [0..1]

© SIG3D 2013

Summary

- A proposal for an enhanced CityGML LOD concept for buildings was presented.
- The central new ideas are
  - to distinguish between a "LOD-G(eometry)" and a "LOD-S(emantics)"
  - to allow the representation of interior building components in different LOD-G
  - to allow a (restricted?) combination of exterior and interior LOD-G / LOD-S
  - to represent the supported LODs by suited metadata.
- A mapping of the existing CityGML LOD concept onto the new one is possible.
- A transfer of the concept to other thematic modules seems to be possible.

© SIG3D 2013